Алматы (7273)495-231
Ангарск (3955)60-70-56
Архангельск (8182)63-90-72
Астрахань (8512)99-46-04
Барнаул (3852)73-04-60
Белгород (4722)40-23-64
Благовещенск (4162)22-76-07
Брянск (4832)59-03-52
Владивосток (423)249-28-31
Владикавказ (8672)28-90-48
Владимир (4922)49-43-18
Волгоград (844)278-03-48
Вологда (8172)26-41-59
Воронеж (473)204-51-73
Екатеринбург (343)384-55-89
Иваново (4932)77-34-06
Ижевск (3412)26-03-58
Иркутск (395)279-98-46
Казань (843)206-01-48
Калининград (4012)72-03-81
Калуга (4842)92-23-67
Кемерово (3842)65-04-62
Киров (8332)68-02-04
Коломна (4966)23-41-49
Кострома (4942)77-07-48
Краснодар (861)203-40-90
Красноярск (391)204-63-61
Курск (4712)77-13-04
Курган (3522)50-90-47
Липецк (4742)52-20-81
Магнитогорск (3519)55-03-13
Москва (495)268-04-70
Мурманск (8152)59-64-93
Набережные Челны (8552)20-53-41
Нижний Новгород (831)429-08-12
Новокузнецк (3843)20-46-81
Ноябрьск (3496)41-32-12
Новосибирск (383)227-86-73
Омск (3812)21-46-40
Орел (4862)44-53-42
Оренбург (3532)37-68-04
Пенза (8412)22-31-16
Петрозаводск (8142)55-98-37
Псков (8112)59-10-37
Пермь (342)205-81-47
Ростов-на-Дону (863)308-18-15
Рязань (4912)46-61-64
Самара (846)206-03-16
Санкт-Петербург (812)309-46-40
Саратов (845)249-38-78
Севастополь (8692)22-31-93
Саранск (8342)22-96-24
Симферополь (3652)67-13-56
Смоленск (4812)29-41-54
Сочи (862)225-72-31
Ставрополь (8652)20-65-13
Сургут (3462)77-98-35
Сыктывкар (8212)25-95-17
Тамбов (4752)50-40-97
Тверь (4822)63-31-35
Тольятти (8482)63-91-07
Томск (3822)98-41-53
Тула (4872)33-79-87
Тюмень (3452)66-21-18
Ульяновск (8422)24-23-59
Улан-Удэ (3012)59-97-51
Уфа (347)229-48-12
Хабаровск (4212)92-98-04
Чебоксары (8352)28-53-07
Челябинск (351)202-03-61
Череповец (8202)49-02-64
Чита (3022)38-34-83
Якутск (4112)23-90-97
Ярославль (4852)69-52-93

Россия +7(495)268-04-70
Казахстан +7(7172)727-132
Киргизия +996(312)96-26-47

https://toyooki.nt-rt.ru || tik@nt-rt.ru

CURRENT-CONTROLLED TYPE DIRECTIONAL AND FLOW CONTROL VALV

CURRENT-CONTROLLED TYPE DIRECTIONAL AND FLOW CONTROL VALVE (EHD3)

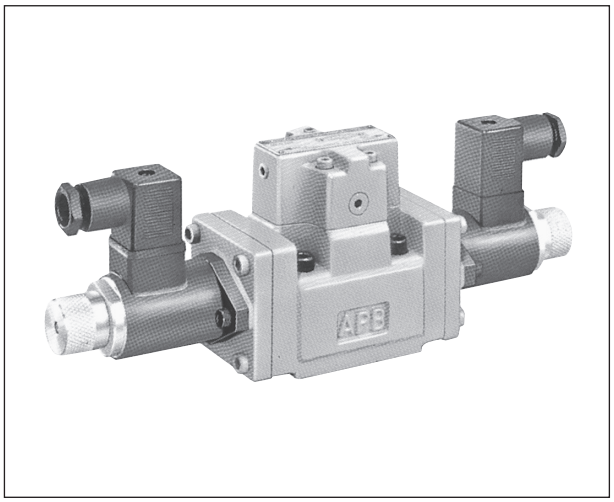

This directional and flow control valve enables remote control of the direction and flow of hydraulic fluid by controlling the solenoid input current. The flow can be controlled steplessly in proportion to the current value.

■Features

1. This valve simplifies hydraulic circuit configuration.
2. The mounting dimensions of a size 06 valve are interchangeable with those of a solenoid valve. Therefore, counterbalance circuits, cylinder circuits, etc. can be simply and compactly configured together with stack valves.
   NOTE: Due attention must be paid to the following points when a size 03 valve is used.
   1) Drain piping is necessary. When a subplate other than model SEHD03-04** is used, measures for drainage must be considered. (Drain piping port is provided on the solenoid valve.)
   2) The valve cannot be used together with HK3K-R-Q*-03.
   3) When the valve is used together with HR3H-*-$^{B}_{D}$*-03, the drainage from the solenoid valve flows to the R port. Therefore, the pressure at the R port must be 0.2 MPa.
3. Fluid can be used in the same level of contamination management as ordinary management.
4. The power consumption of the solenoid is as low as 3.6 W.
   If the load pressure sensitive type valve is used, since the pump pressure is controlled to the minimum required level corresponding to the variations in load pressure, the required power can be drastically reduced.
5. If the valve with internal feedback (EHD3-06-F type) is used, the throttle valve position is feedback controlled. This reduces hysteresis to enable precision control.

- The valve can be used for fluids equivalent to ISO VG32 to 56.
- The allowable maximum fluid temperature is 60°C.
- If a subplate is necessary, please order one separately.

■Specifications

Item \ Nominal size / type		Size 03			Size 06 (includes the model with internal feedback)		
		Variable throttle type	Load pressure sensitive type	Pressure compensation type	Variable throttle type	Load pressure sensitive type	Pressure compensation type
Max. Operating pressure	MPa	21					
Max. Controllable flow	L/min	60			150		
Permisstble back pressure at R port	MPa	21					
Permisstble back pressure at drain port	MPa	0.2					
Drain flow	L/min	3 or less			3.5 or less		
Supply flow to P port	L/min	—	80	—	—	190	—
Relief valve pressure adjustment range	MPa	—	3.5 to 21	—	—	3.5 to 21	—
Pressure reducing valve pressure adjustment range	MPa	—	—	3.5 to 21	—	—	3.5 to 21

■Solenoid characteristics

Model	Coil input current	Coil resistance
ESH-0103-D3	0 to 300 mA	34 Ω

■Description of the model designation

■Valve types

Valve type		Variable throttle type		Load pressure sensing type		Pressure compensation type		
		Meter-in	Meter-out	Meter-in		Meter-in		Meter-out
				—	With relief valve	—	With pressure reducing valve	
Model		EHD3-Y***-G3***-**(-F)	EHD3-***-G3BCA-**(-F)	EHD3-Y***L-G3***-**(-F)	EHD3-Y***LR-G3***-**(-F)	EHD3-Y***P-G3***-**(-F)	EHD3-Y***PG-G3***-**(-F)	EHD3-***P-G3BCA-**(-F)
Symbol (NOTE)		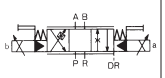	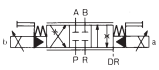	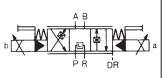	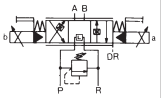	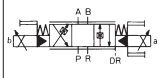	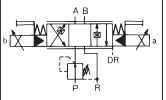	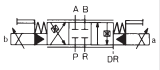
Function	Flow control	○	○	○	○	○	○	○
	Pressure compensation	—	—	○	○	○	○	○
	Load pressure sensing	—	—	○	○	—	—	—
	Pump unloading at neutral position	—	—	○	○	—	—	—
	Relief control	—	—	—	○	—	—	—
	Pressure reducing control	—	—	—	—	—	○	—

In Model Designation, "***" indicates BCA or BGA. Please specify either of them.

NOTE 1: With size 03, the "b" and "a" positions are reversed.
NOTE 2: Internal feedback is available only for size 06.

■Outside dimensions

EHD3-(Y)60-G3***-03**

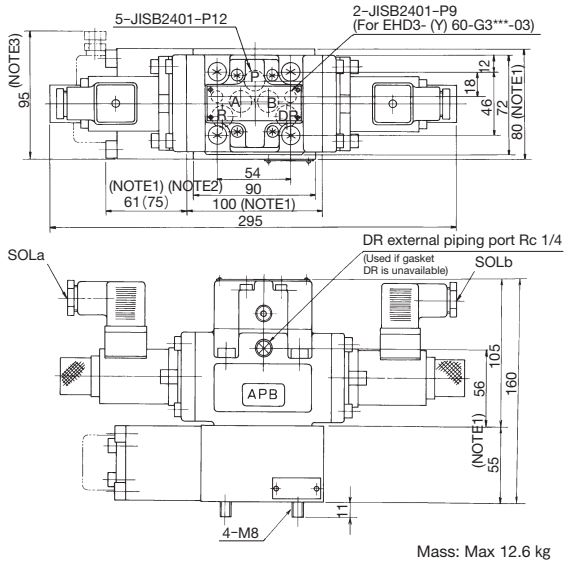

Mass: Max 12.6 kg

SEHD03-04T1

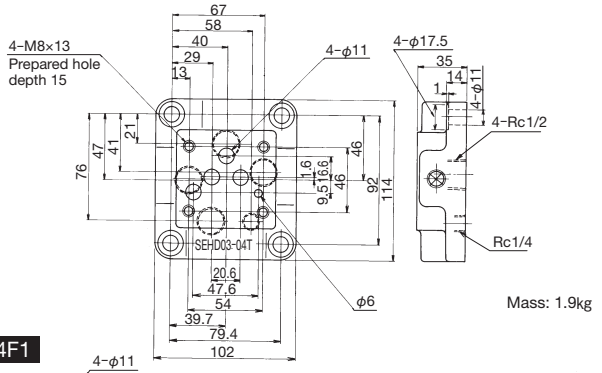

Mass: 1.9kg

SEHD03-04F1

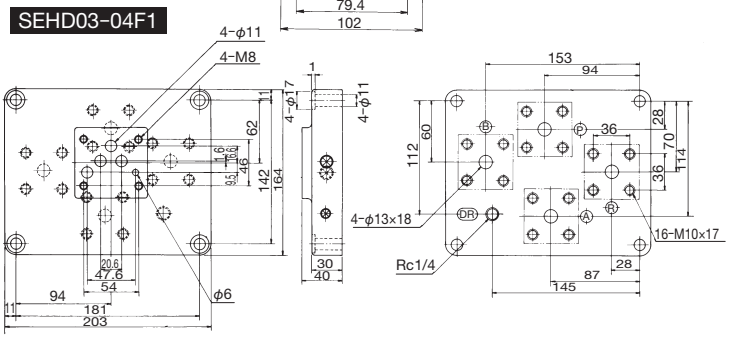

Mass: 7.7 kg

NOTE 1: This part is added for the load pressure sensitive type and pressure compensation type.
NOTE 2: Dimensions in parentheses are for EHD3-Y60P(G)-G3***-03.
NOTE 3: The dimension is for EHD3-Y60LR/Y60PG-G3***-03.

EHD3-(Y)150-G3*-06**

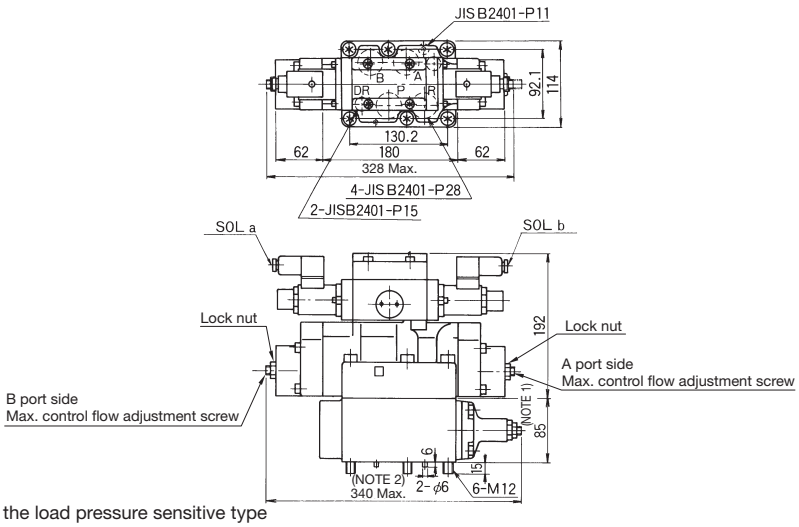

Mass: Max 35 kg

NOTE 1: This part is added for the load pressure sensitive type and pressure compensation type.
NOTE 2: The dimension is for EHD3-Y150LR/Y150PG-G3***-06.

For the sub-plate SHD06-**T1(A), refer to page L-3.

■Outside dimensions

EHD3-(Y)150(**)-G3*-06-F**

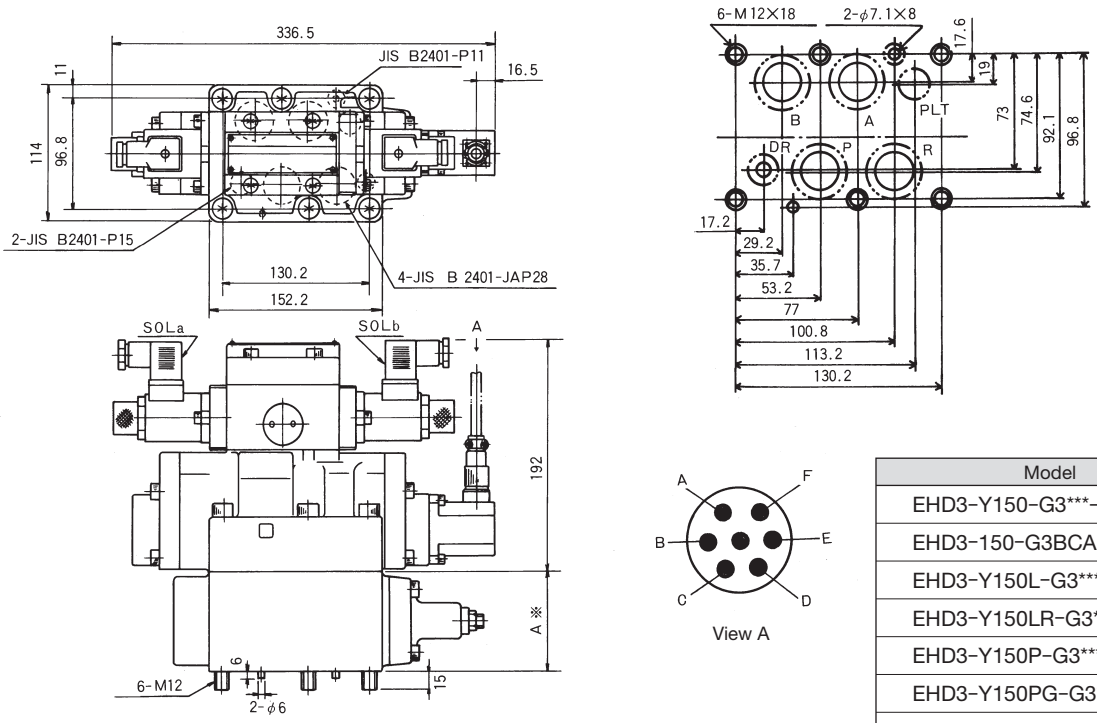

Mass: Max 36 kg

(Unit: mm)

Model	A
EHD3-Y150-G3***-06-F	—
EHD3-150-G3BCA-06-F	—
EHD3-Y150L-G3***-06-F	85
EHD3-Y150LR-G3***-06-F	85
EHD3-Y150P-G3***-06-F	85
EHD3-Y150PG-G3***-06-F	85
EHD3-Y150P-G3BCA-06-F	85

NOTE: Wiring method
For terminals A, B, C, D, E, and F in View A, refer to the explanation of the terminal function for ECAD-D1FB-* (amplifier for internal feedback) on page G-19.

EHD3-(Y) * (**)-G3 *** - ** -(F)**

- (F): No code: Without internal feedback
  F: With internal feedback NOTE: Internal feedback (EHD3-F) is available only for size 06
- **: Nominal size 03: 3/8
  06: 3/4
- ***: BCA: Closed center
  BGA: ABR connection (only for meter-in control)
- G3: 3-position type
- G3: Gasket-connection type (ISO standard)
- (**): No code: Variable throttle type
  P:Pressure compensation type
  PG: Pressure compensation type with pressure reducing valve
  L:Load pressure sensitive type
  LR: Load pressure sensitive type with relief valve
  } Only for meter-in control
- *** (Y): Max. controllable flow Size 03: 60
  Size 06: 150
- (Y): No code: Meter-out control
  Y:Meter-in control
- EHD3: Max. operating pressure 3: 21 MPa
- EHD3: Current-controlled type directional and flow control valve

Алматы (7273)495-231
Ангарск (3955)60-70-56
Архангельск (8182)63-90-72
Астрахань (8512)99-46-04
Барнаул (3852)73-04-60
Белгород (4722)40-23-64
Благовещенск (4162)22-76-07
Брянск (4832)59-03-52
Владивосток (423)249-28-31
Владикавказ (8672)28-90-48
Владимир (4922)49-43-18
Волгоград (844)278-03-48
Вологда (8172)26-41-59
Воронеж (473)204-51-73
Екатеринбург (343)384-55-89
Иваново (4932)77-34-06
Ижевск (3412)26-03-58
Иркутск (395)279-98-46
Казань (843)206-01-48
Калининград (4012)72-03-81
Калуга (4842)92-23-67
Кемерово (3842)65-04-62
Киров (8332)68-02-04
Коломна (4966)23-41-49
Кострома (4942)77-07-48
Краснодар (861)203-40-90
Красноярск (391)204-63-61
Курск (4712)77-13-04
Курган (3522)50-90-47
Липецк (4742)52-20-81
Магнитогорск (3519)55-03-13
Москва (495)268-04-70
Мурманск (8152)59-64-93
Набережные Челны (8552)20-53-41
Нижний Новгород (831)429-08-12
Новокузнецк (3843)20-46-81
Ноябрьск (3496)41-32-12
Новосибирск (383)227-86-73
Омск (3812)21-46-40
Орел (4862)44-53-42
Оренбург (3532)37-68-04
Пенза (8412)22-31-16
Петрозаводск (8142)55-98-37
Псков (8112)59-10-37
Пермь (342)205-81-47
Ростов-на-Дону (863)308-18-15
Рязань (4912)46-61-64
Самара (846)206-03-16
Санкт-Петербург (812)309-46-40
Саратов (845)249-38-78
Севастополь (8692)22-31-93
Саранск (8342)22-96-24
Симферополь (3652)67-13-56
Смоленск (4812)29-41-54
Сочи (862)225-72-31
Ставрополь (8652)20-65-13
Сургут (3462)77-98-35
Сыктывкар (8212)25-95-17
Тамбов (4752)50-40-97
Тверь (4822)63-31-35
Тольятти (8482)63-91-07
Томск (3822)98-41-53
Тула (4872)33-79-87
Тюмень (3452)66-21-18
Ульяновск (8422)24-23-59
Улан-Удэ (3012)59-97-51
Уфа (347)229-48-12
Хабаровск (4212)92-98-04
Чебоксары (8352)28-53-07
Челябинск (351)202-03-61
Череповец (8202)49-02-64
Чита (3022)38-34-83
Якутск (4112)23-90-97
Ярославль (4852)69-52-93

Россия +7(495)268-04-70
Казахстан +7(7172)727-132
Киргизия +996(312)96-26-47

https://toyooki.nt-rt.ru || tik@nt-rt.ru